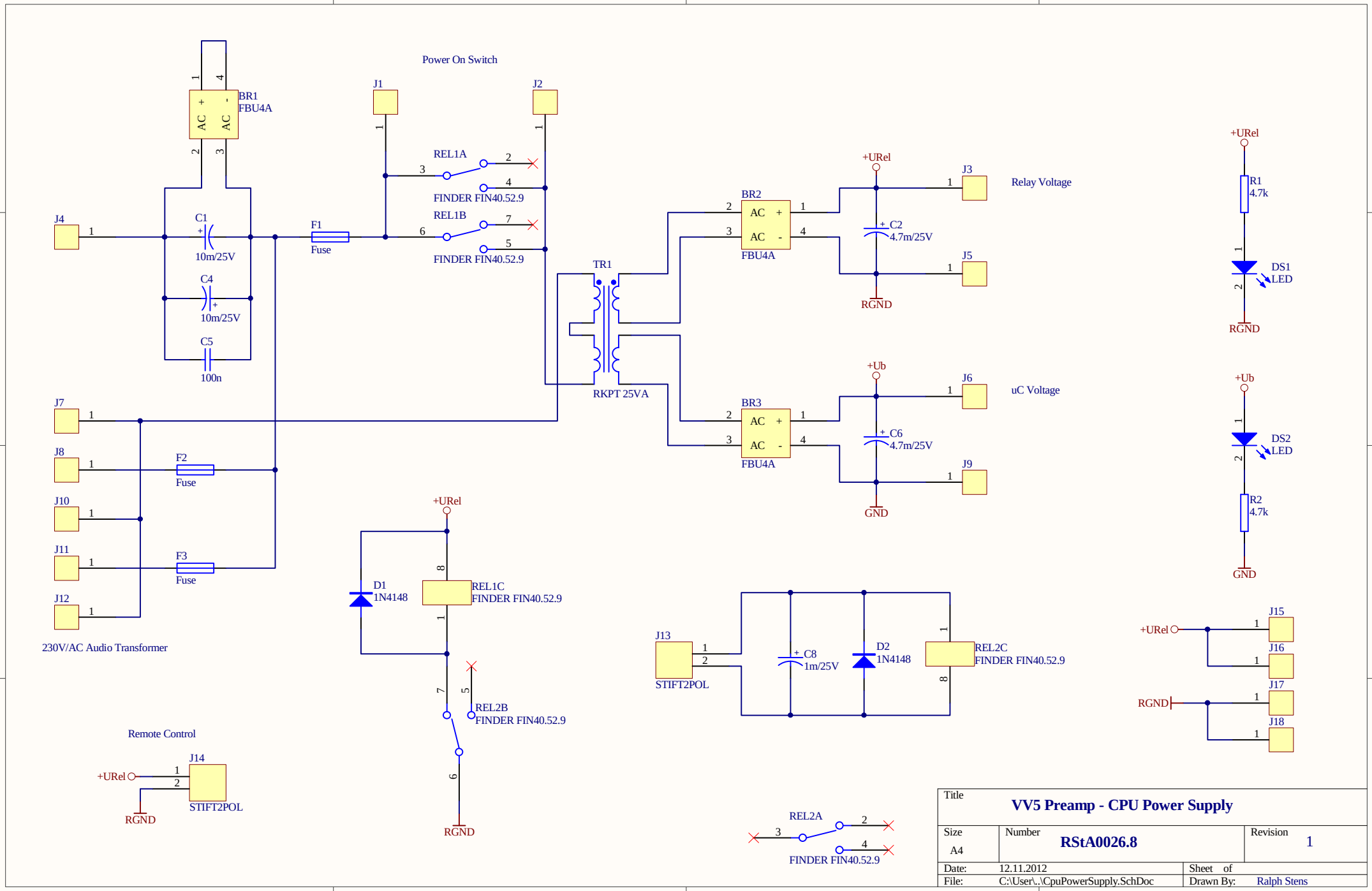
Power On Switch
BR1
FBU4A
AC
AC
J1
J2
REL1A
FINDER FIN40.52.9
REL1B
FINDER FIN40.52.9
J4
C1
10m/25V
C4
10m/25V
C5
100n
F1
Fuse
TR1
RKPT 25VA
BR2
FBU4A
+URel
J3
Relay Voltage
C2
4.7m/25V
J5
RGND
BR3
FBU4A
+Ub
J6
uC Voltage
C6
4.7m/25V
J9
GND
R1
4.7k
DS1
LED
DS2
LED
R2
4.7k
J7
J8
F2
Fuse
J10
J11
F3
Fuse
J12
230V/AC Audio Transformer
D1
1N4148
REL1C
FINDER FIN40.52.9
REL2B
FINDER FIN40.52.9
J13
STIFT2POL
C8
1m/25V
D2
1N4148
REL2C
FINDER FIN40.52.9
J15
J16
J17
J18
Remote Control
J14
STIFT2POL
REL2A
FINDER FIN40.52.9
Title
VV5 Preamp - CPU Power Supply
Size
A4
Number
RStA0026.8
Revision
1
Date: 12.11.2012
Sheet of
File: C:\User\..\CpuPowerSupply.SchDoc
Drawn By: Ralph Stens